6′ AND 8′ CHANDELIER
ASSEMBLY INSTRUCTION

INVENTORY LIST

4 EA.	UPPER 1/4 RING SECTIONS
1 EA.	LOWER-RINGS
8 EA.	BUTTERFLY BOLTS
4 EA.	SHORT AIRCRAFT CABLES
4 EA.	LONG AIRCRAFT CABLES
1 EA.	JUMPER CABLE
2 EA.	BEAD STRING PANELS
1 EA.	50′ LEAD CABLE
1 EA.	DMX CONTROLLER
1 EA.	TRANSFORMER

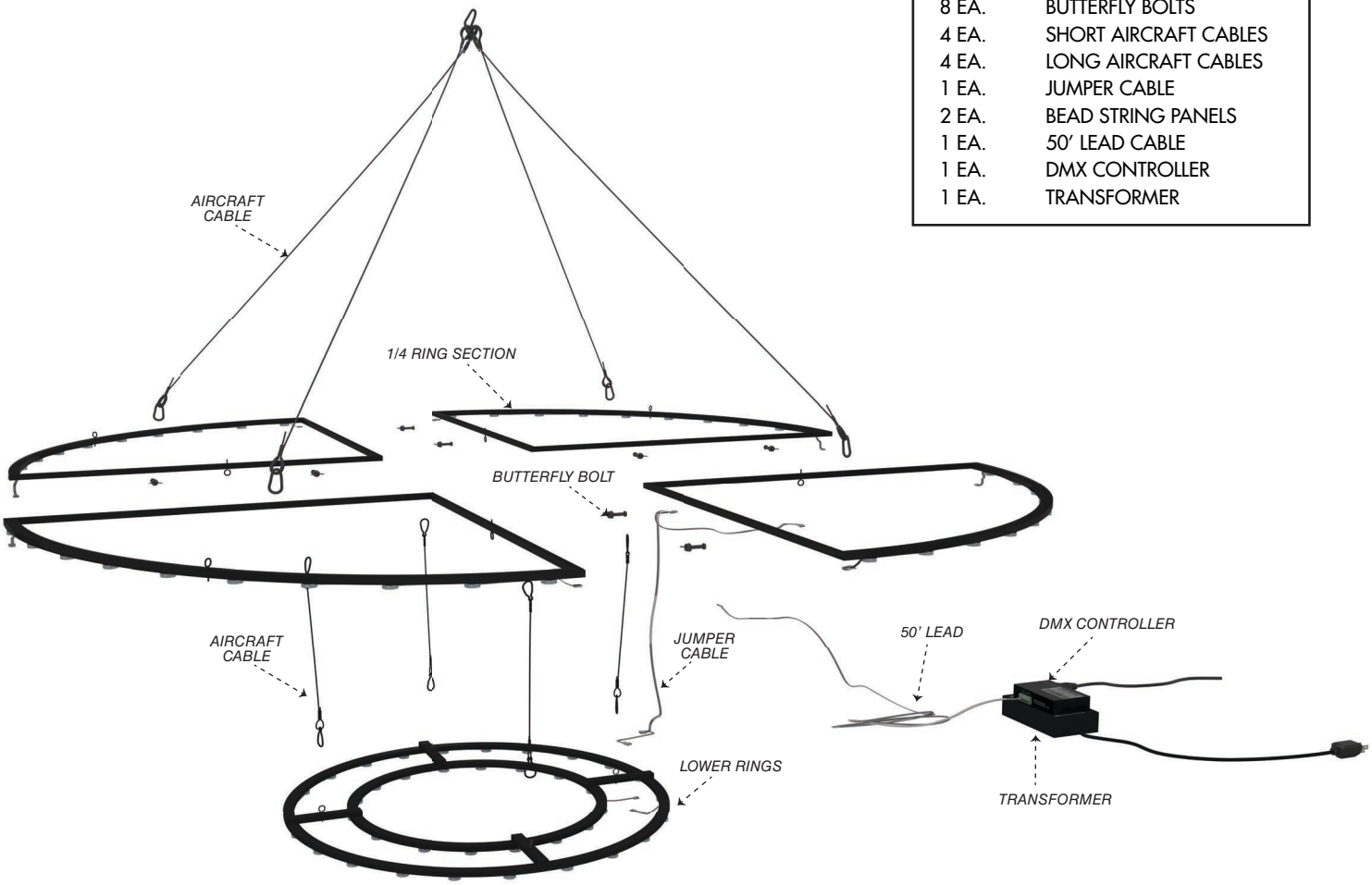

1. ASSEMBLE UPPER RING USE THE BUTTERFLY BOLTS TO BOLT TOGETHER AND ASSEMBLE THE 4 SECTIONS FORMING A COMPLETE UPPER RING.

FULL VIEW

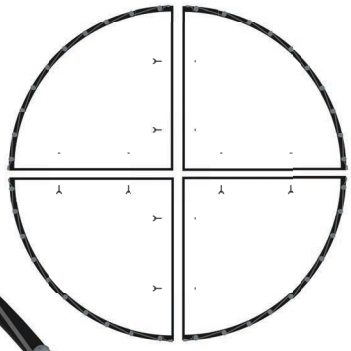

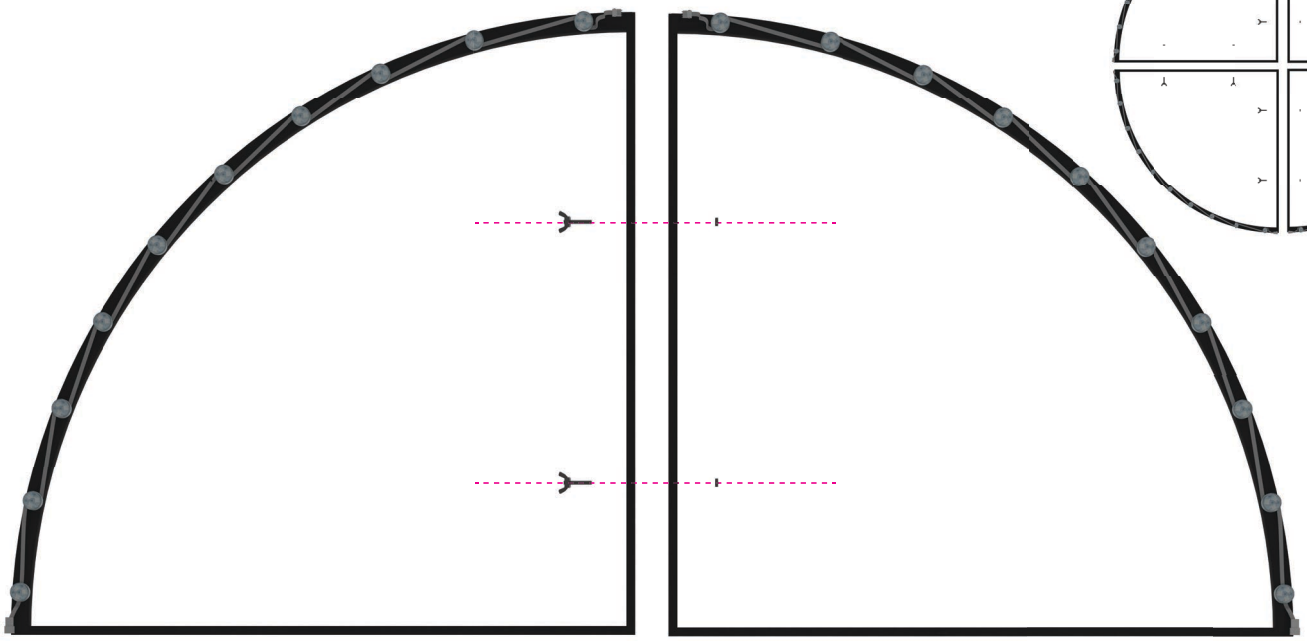

2. HANG UP THE FRAMES SUSPEND THE LOWER SECTION FROM THE UPPER SECTION, BY ATTACHING THE SHORTER AIRCRAFT CABLES TO EYEBOLTS AT EACH END.

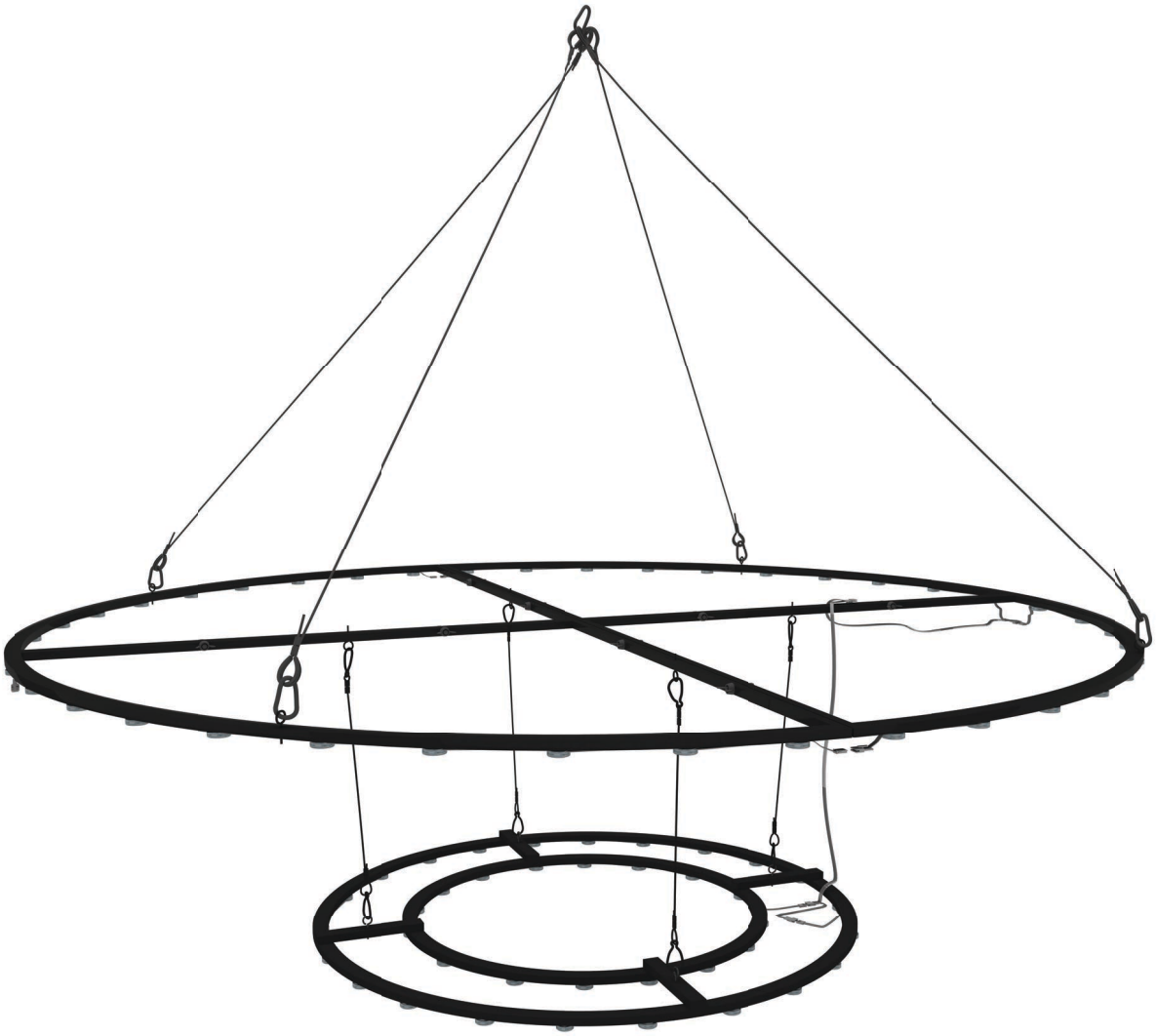

3. CONNECT JUMPER TO UPPER RING CONNECT THE END OF THE JUMPER (*THE END WITH ONE HEAD)* TO ONE OF THE CONNECTORS ON THE UPPER RING.

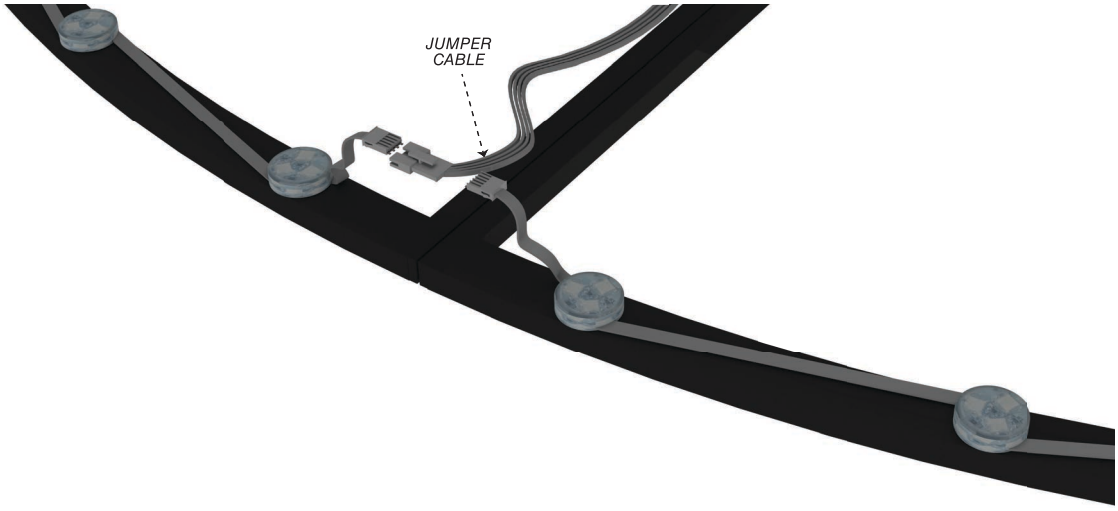

4. CONNECT UPPER RING CONNECTORS CONNECT ALL REMAINING CONNECTORS ON THE UPPER RING.

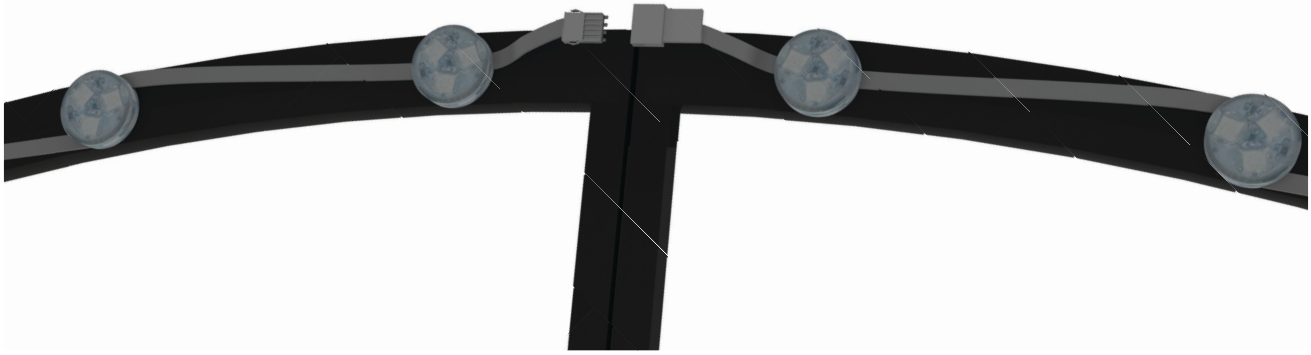

5. CONNECT JUMPER TO LOWER RING CONNECT THE OTHER END OF THE JUMPER (*THE END WITH THE 2 HEADS*) TO THE CONNECTORS ON THE LOWER RINGS.

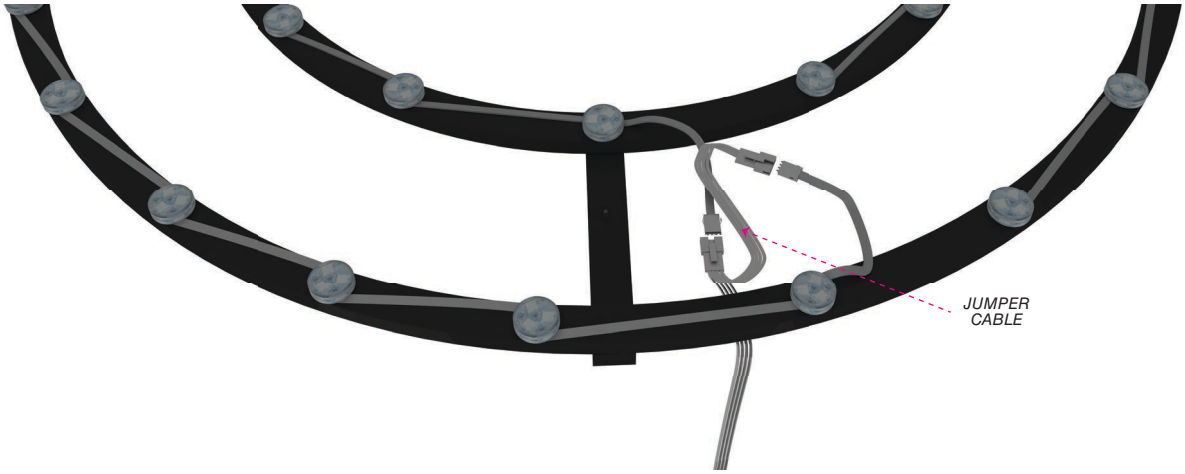

6. CONNECT JUMPER TO 50′ LEAD CONNECT THE MIDDLE CONNECTOR OF THE JUMPER TO THE 50′ LEAD.

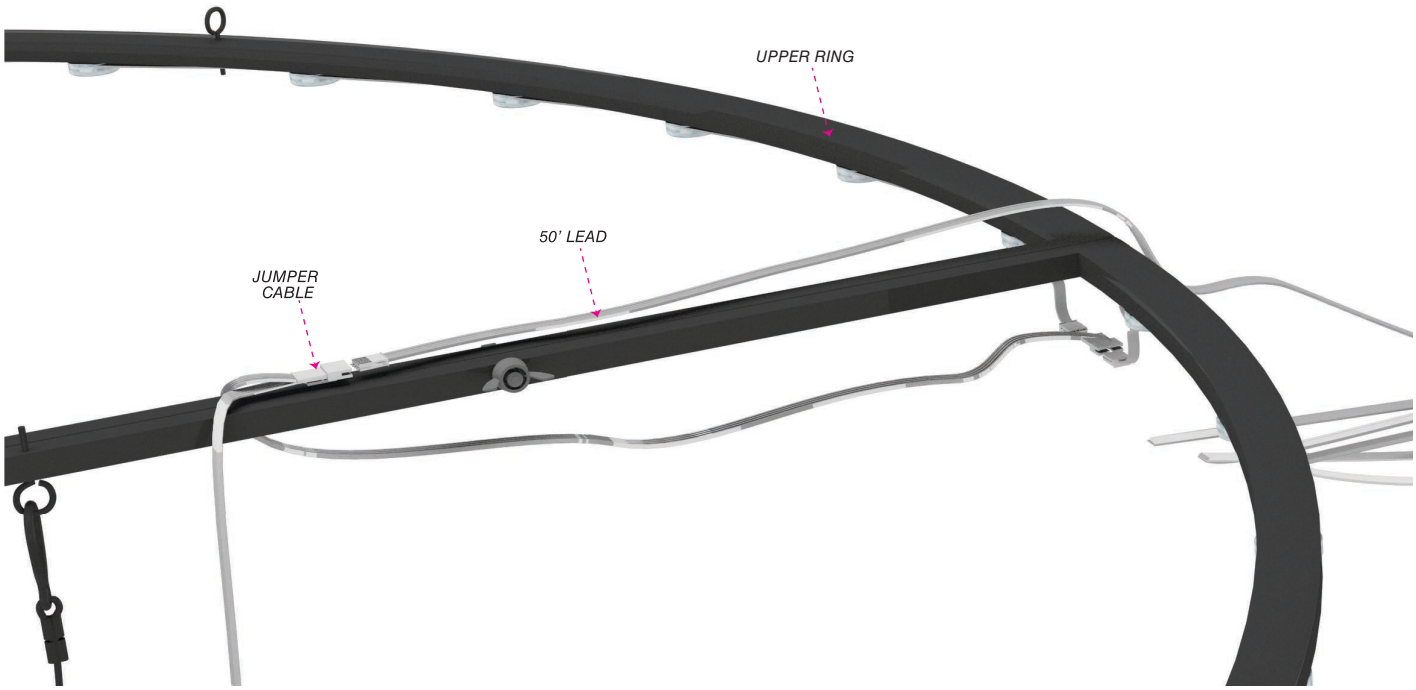

7. CONNECT 50' LEAD TO CONTROLLER CONNECT THE OTHER END OF THE 50' LEAD TO THE DMX CONTROLLER.

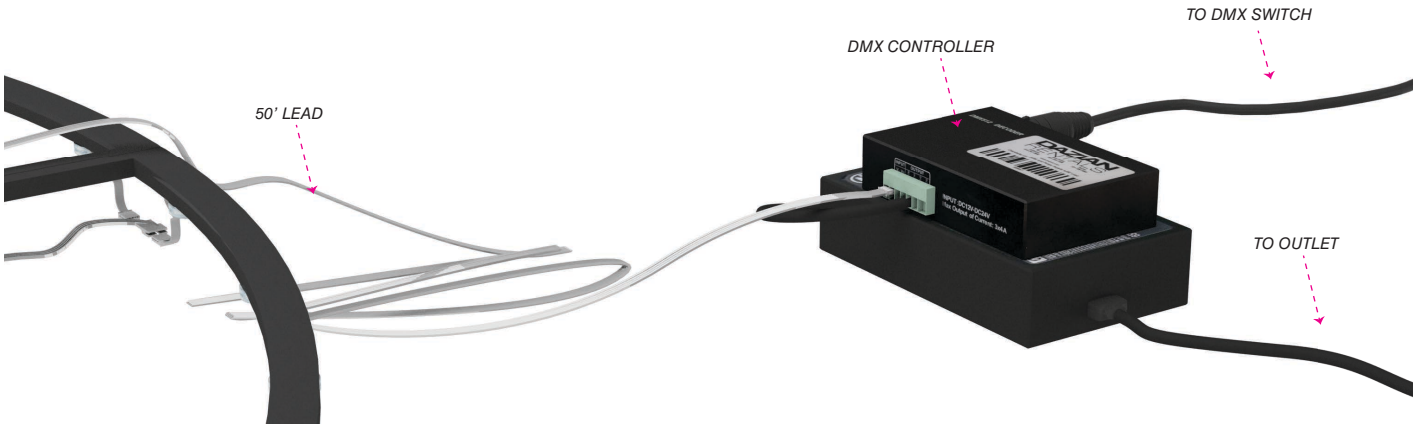

8. ATTACH INNER BEAD CURTAIN VELCRO-ATTACH THE INNER BEAD CURTAIN TO THE INNER RING OF THE LOWER SECTION. USE ZIP TIES WHEREVER NECESSARY TO GIVE MORE SECURITY.

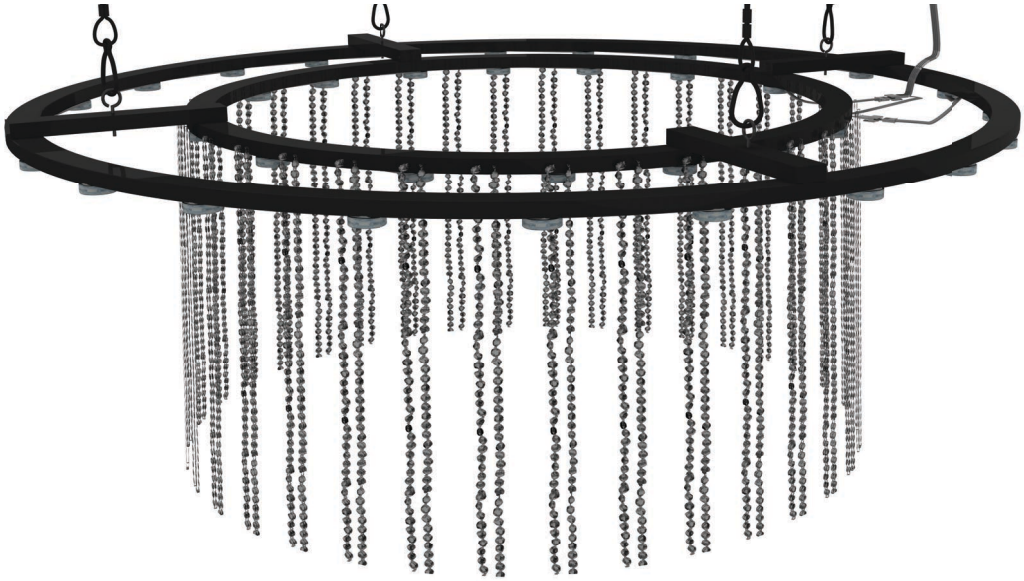

9. ATTACH OUTER BEAD CURTAIN VELCRO-ATTACH THE OUTER BEAD CURTAIN, FIRST TO THE UPPER RING, THEN TO THE OUTER RING OF THE LOWER SECTION. USE ZIP TIES WHEREVER NECESSARY TO GIVE MORE SECURITY.

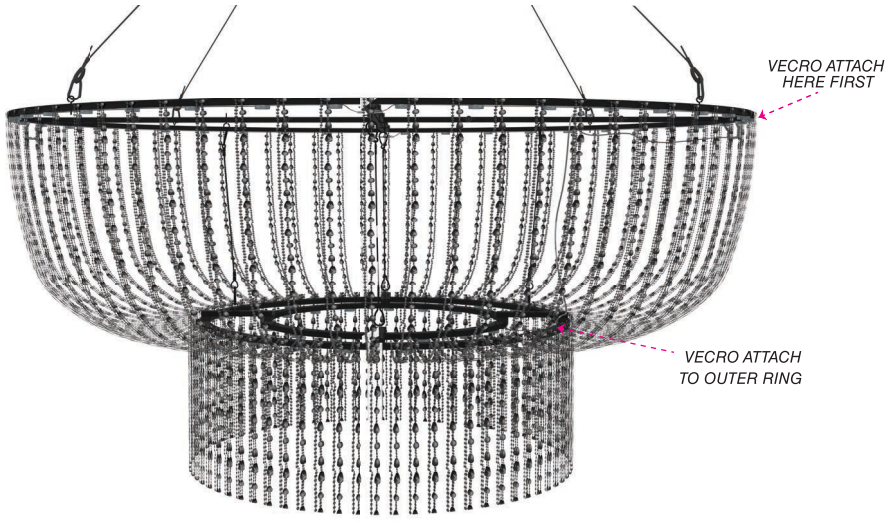

DMX512 DECODER

USER MANUAL

I. Specifications

Working temperature: -20-60˚ C
Supply voltage: DV 12-24V
Product size: L166xW67xH41 mm
Package size: L185xW85xH59 mm
Net weight: 340g
Gross weight: 380g
Output: Three CMOS drain-open output
Connecting Mode: Common anode
Max output current: 4 A each color

II: Function

1. Each DMX common controller occupied 3 DMX addresses. Each coding switch can set address code from 1 to 9, 1 is the lowest, and 9 is the highest. A combination of 511 address codes are possible. DMX original address code is the total value of the coding switch value from 1 to 9. Dial the coding switch upward (ON is set to 1) to set the bit value (by default the bit value is 0). For example: if you want to set 37 as the address code, you can only dial down the first, the third, and the sixth code switch, the total value of coding switch from 1 to 9 is 32+4+1. The default address code of DMX512 is 37.

2. DMX signal can be received when coding switch FUN (10) = OFF (ON is set to 0)

3. When the coding switch FUN (10) is on, its function is as follows:

CODING SWITCH	FUNCTION
Switch 1-9 is OFF	**black**
Switch 1 = ON	**red**
Switch 2 = ON	**green**
Switch 3 = ON	**blue**
Switch 4 = ON	**yellow**
Switch 5 = ON	**purple**
Switch 6 = ON	**cyan**
Switch 7 = ON	**white**
Switch 8 = ON	**seven-color jumpy changing (8 steps speed)**
Switch 9 = ON	**seven-color gradual changing (8 step speed)**

4. If the coding switch is 8 or 9, speed option is 1 to 7. There are 8 steps total:

Switch 1-7 is OFF	**0 step**
Switch 1 = ON	**1 steps**
Switch 2 = ON	**2 steps**
Switch 3 = ON	**3 steps**
Switch 4 = ON	**4 steps**
Switch 5 = ON	**5 steps**
Switch 6 = ON	**6 steps**
Switch 7 = ON	**7 steps (the greatest speed)**

5. There can be several switches ON at the same time.

III: Interface Diagram

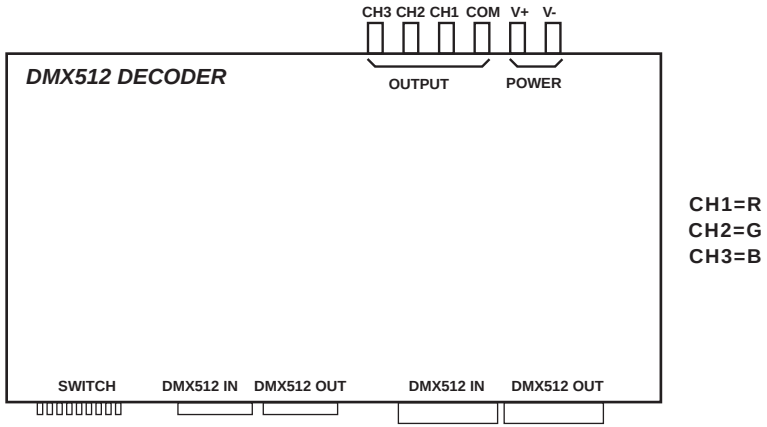

IV. Safety Information

1. Input voltage specifications for this controller should be followed strictly to avoid accidents or damage to the device.

2. Never connect two wires directly to avoid circuit shorting.

3. Lead wire should be connected according to the color diagram.

4. The warranty is valid for one year - we guarantee replacement or repairing free of charge. Warranty may be voided if product is misused or damage is artificially induced.

V. Connect Diagram

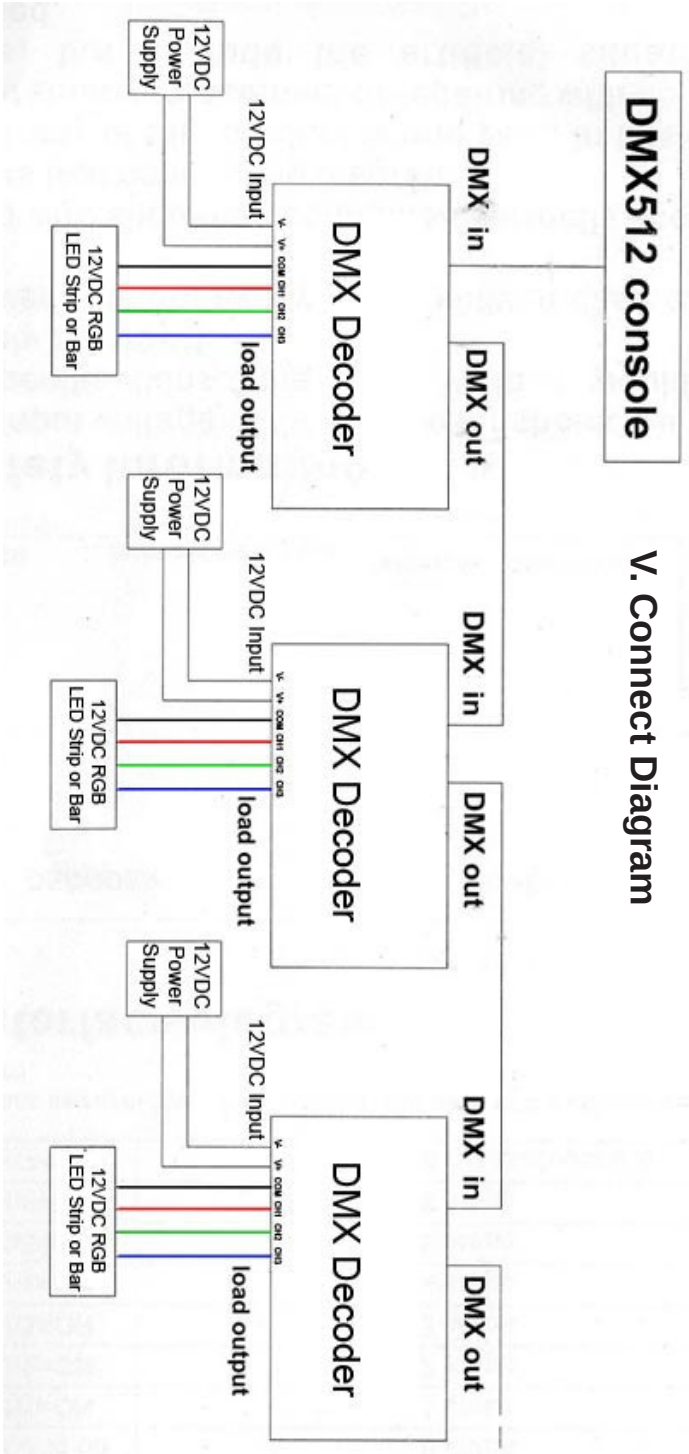

Dimensional Drawing

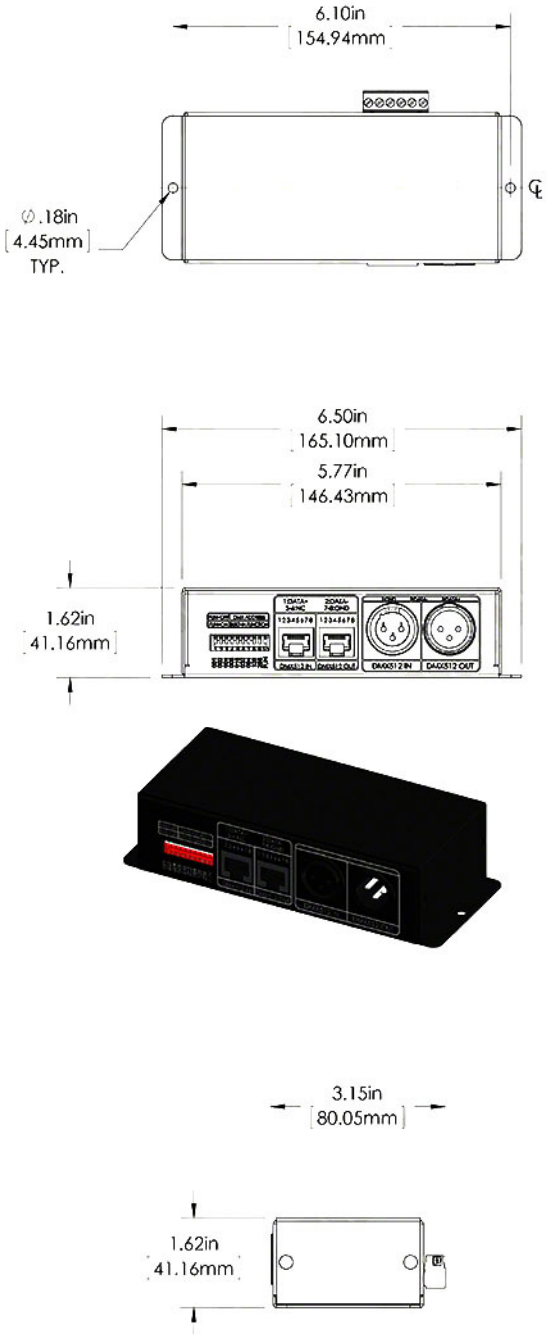
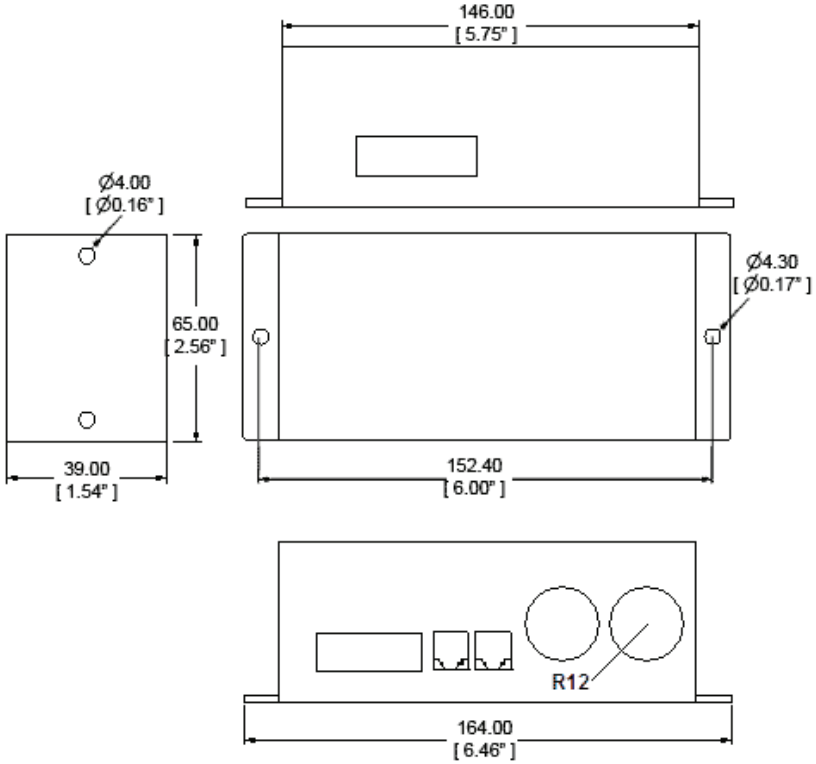
Controller